GIGAfab A & M

FAMILY OVERVIEW

HIGH VOLUME PHOTORESIST STRIP AND DESCUM



PVA TePla

ABOUT THE SYSTEM

SINGLE WAFER PLASMA ASHING
WITH OUR GIGAFAB PLASMA SYSTEM.

Shrinking structures leave no room for uneven resist removal. GIGAfab answers with microwave plasma for high uniformity and high ash rates — configured to your fab.

The GIGAfab Single Wafer Plasma System is designed to serve semiconductor device fabrication, wafer bumping and MEMS-manufacturing. The system is equipped with a unique microwave plasma source for high uniformity, providing high ash rates across a wide temperature range. The modular platform can be configured for various wafer dimensions and tool configurations such as open cassette or FOUP load port, SMIF-pod opener or EFEM, based on the customer requirements. The standard configuration is equipped with a single arm robot, pre-aligner and an open cassette load station for wafers.

The plasma chamber contains the gravity wafer chuck for substrate temperature control, ranging from RT up to 200 °C. The wafers will be loaded to and from the chuck by means of lift pins. The typical throughput achieved with the standard configuration is 45–60 wafers per hour, depending on application, resist and substrate temperature limitation. Faster robot versions and multi-chamber solutions for higher throughput are also available.



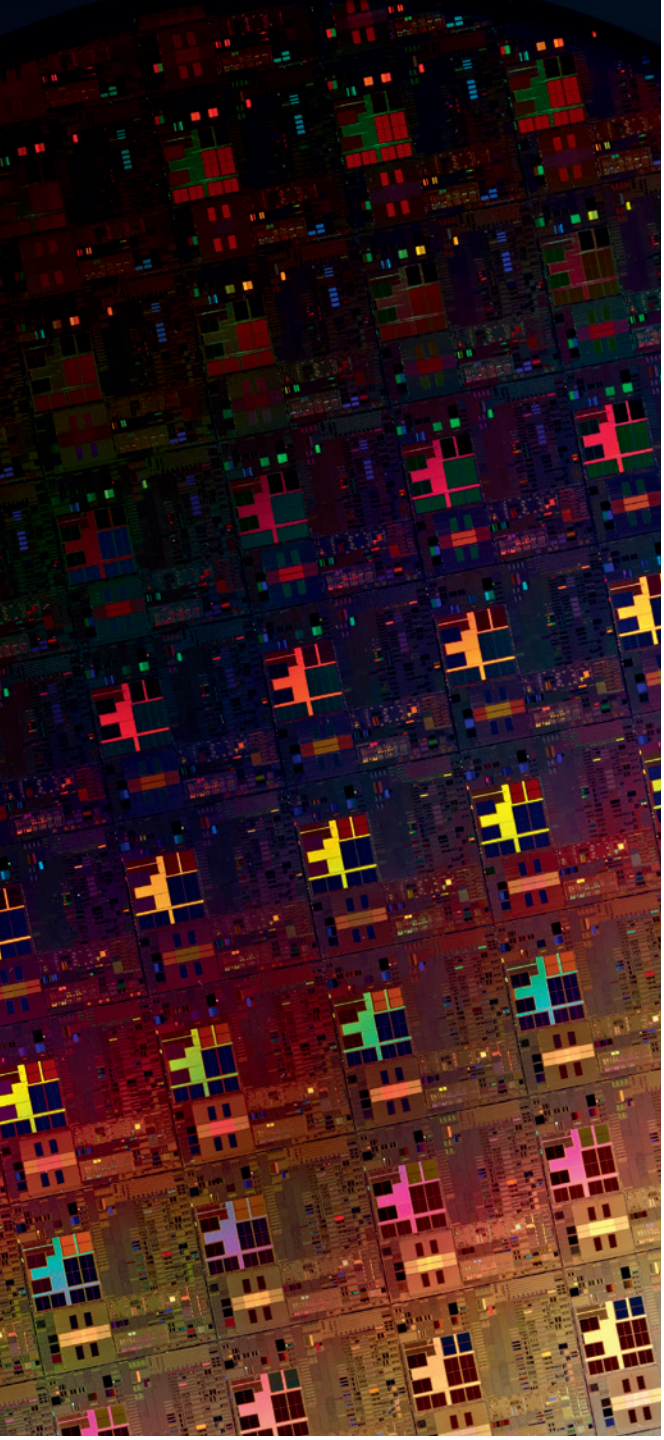

APPLICATIONS

CLEAN SURFACES
FOR EVERY NEXT STEP

Photoresist is the temporary stencil of chip manufacturing: it defines structures in lithography, masks areas during etching and implantation – and must then be removed completely without affecting the layers beneath. This is where plasma ashing comes in.

In front-end processing, GIGAfab strips resist after reactive ion etching and high-dose implantation, where the resist surface has hardened into a crust. In wafer bumping, a descum step clears residual resist from the openings before plating, creating the basis for reliable bump adhesion. In MEMS manufacturing, the system removes sacrificial layers of photoresist, polyimide or PMMA to release movable structures. Different applications, one shared goal: clean surfaces for the next process step.

- High volume resist stripping after Implant, Dry-Etch, Wet-etch, etc.
- Stripping/Descum for semiconductor device & MEMS-manufacturing
- Removal of special resist materials like Polyamide, SU-8, Epoxy, PMMA
- Sacrificial layer removal
- Surface Cleaning prior to deposition or wet-etch
- Oxygen/CF4 plasma modification of surfaces (surface engineering)

SPECIFICATIONS

TECHNICAL PARAMETERS

SPECIFICATIONS	GIGAfab A SERIES	GIGAfab M SERIES
Wafer Loading	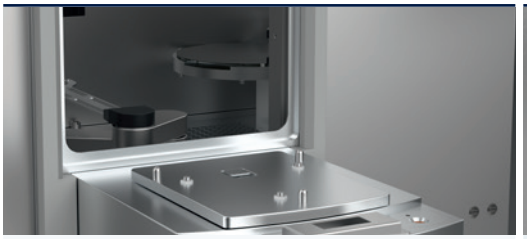	
	Fully automatic wafer handling, 3-axis robot, single arm, vacuum end effector with wafer mapper and on-the fly alignment by optical sensors	**Manual wafer handling,** multiple customized holders for any type of substrate available, maximum size 300 mm x 300 mm
Process chamber	Aluminum	
Process gas supply	2 gas channels included (optional 2 more)	
Vacuum gauge	capacitance manometer	
Pressure Control	Down stream control valve	
Wafer size	150 mm, 200 mm and/or 300 mm	
Plasma generation	Microwave source (2.45 GHz), maximum power 2,000 W	
End Point Detection	Optical emission EPD & Plasma verification	
Control hardware	■ PC based system (Windows 10 IoT) controller with 17" touchscreen and graphical user interface ■ Ethernet, USB, RS232 interface ■ Light tower for system status R/Y/G with buzzer	
Program Features	Manual or automatic operation, user password, multiple recipe storage (1–10 steps each), self test routines, warning and error messaging	
Process Tracking	Real time monitoring, on-screen display of graphic plots, data logging, export of process data	
Standards	CE-certified, Semi S2/S8 compliant	
SUPPLIES		
Electricity	230/400 V, 50/60 Hz, 3 Phase, N, PE, 3 x 16 A (installed power approx. 12 kW)	
Process Gas, Vent	1–2 bar (15–30 psi), 1/4" VCR female	
Compressed Air	DN6 FESTO hose connector, 5–6 bar	
Vacuum	DN4 FESTO hose connector	
DIMENSIONS		
Width / Height / Depth	1,150 x 2,150 x 2,600 mm	950 x 2,000 x 1,300mm
Weight	950 kg	550 kg
OPTIONAL FEATURES		
Optional Features	■ Wafer ID-reader and Wafer Pre-Aligner ■ SMIF or FOUP load port ■ SECS GEM factory automation interface ■ Pulse Power Supply ■ Additional Gas Channels	

SPECIFICATIONS

DIMENSIONS

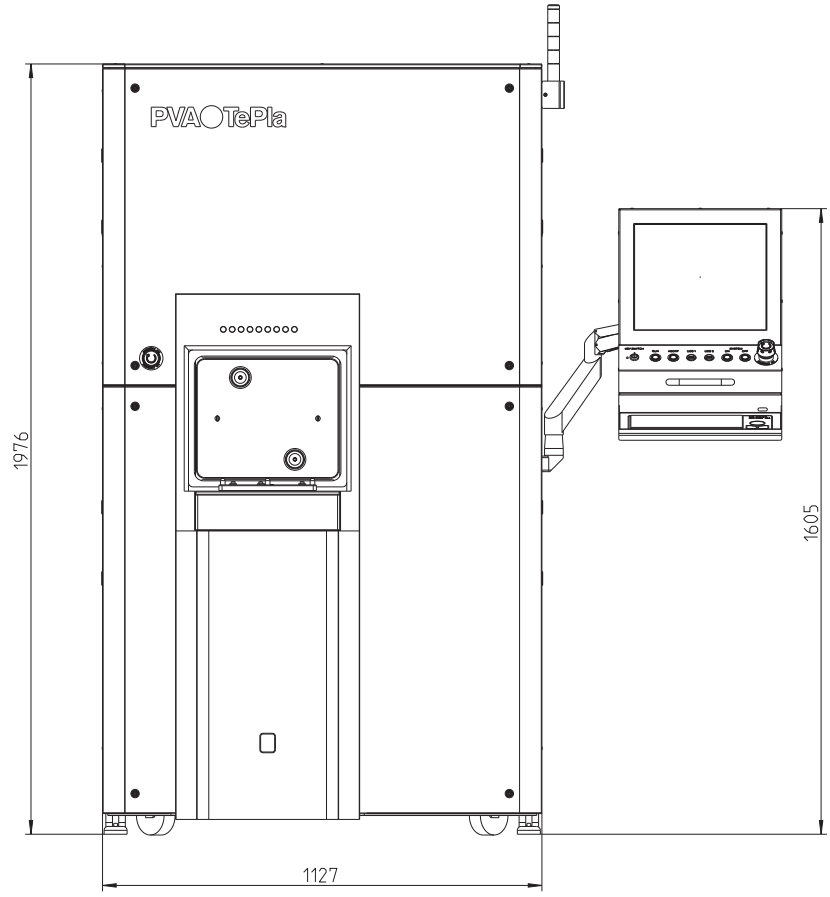

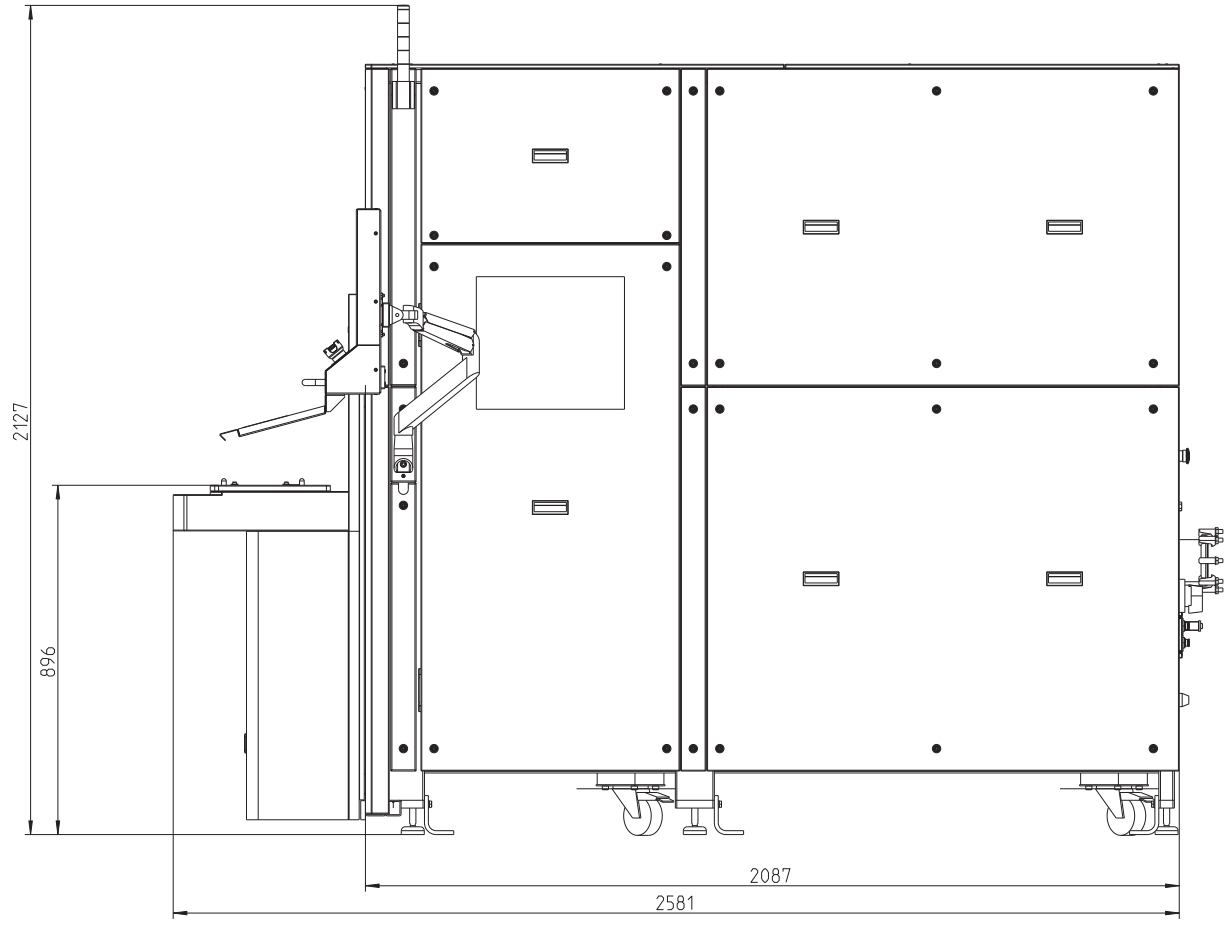

PVA TePla AG | Metrology & Plasma Solutions
Im Westpark 10–12 | 35435 Wettenberg

+49 (0)641 686 90-0
plasma-info@pvatepla.com
www.pvatepla.com

Disclaimer
The information provided is subject to technical progress and may change without prior notice. No liability is assumed for negligent errors, inaccuracies, or printing mistakes.
All information is non-binding

Version 10/2026 | © 2026 PVA TePla AG. All rights reserved.